SMARTER IMAGING FOR BETTER LIVES
Perth: +61 (08) 9242 5411 **Sydney**: +61 (02) 9905 5551
Melbourne: +61 (03) 9384 1775

Email: sales@adeptturnkey.com.au
Web site: www.adept.net.au

N20-1210-16

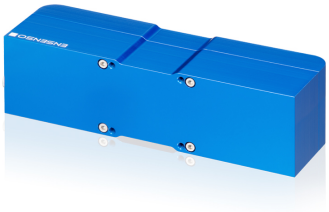

Specification

Technical data

Minimum working distance	270 mm
Maximum working distance	270 mm
Optimum working distance	270 mm
Focal length	12 mm
Mass	550 g
Vergence angle	10.00
Resolution (h x v)	1280 x 1024
Dimensions H/W/L	50.0 mm x 175.0 mm x 50.0 mm
f-number	1.6
Base line	100 mm
Power consumption	9.5 W

Measurement volume

Distance	Z resolution	View field size X	View field size Y	Optics blur	Pixel size
262 mm	0.036 mm	128.37 mm	113.50 mm	2.443 px	0.111 mm
263 mm	0.037 mm	129.24 mm	113.93 mm	2.319 px	0.111 mm
264 mm	0.037 mm	130.11 mm	114.37 mm	2.197 px	0.112 mm
265 mm	0.037 mm	130.98 mm	114.80 mm	2.075 px	0.112 mm
266 mm	0.037 mm	131.85 mm	115.23 mm	1.954 px	0.113 mm
267 mm	0.038 mm	132.73 mm	115.67 mm	1.834 px	0.113 mm
268 mm	0.038 mm	133.60 mm	116.10 mm	1.715 px	0.113 mm
269 mm	0.038 mm	134.47 mm	116.53 mm	1.597 px	0.114 mm
270 mm	0.039 mm	135.34 mm	116.96 mm	1.479 px	0.114 mm

N20-1210-16

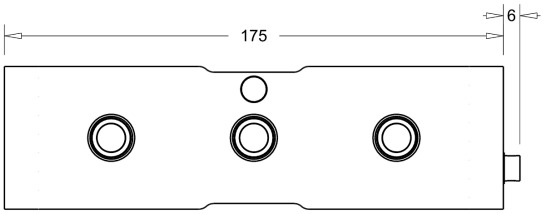

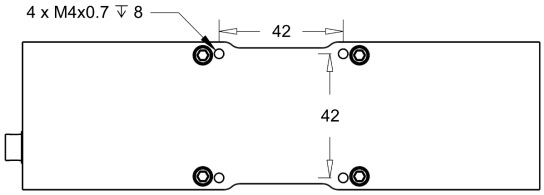

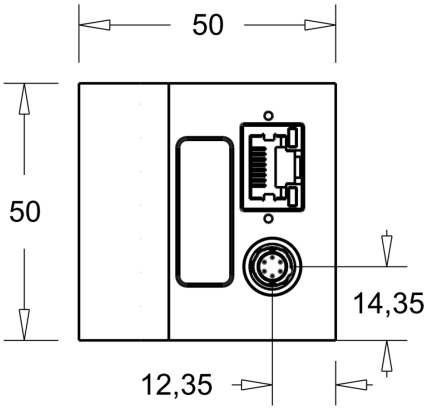

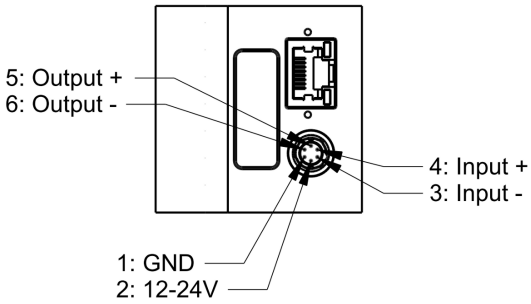

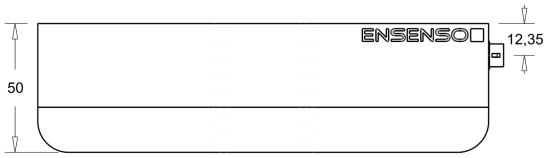

www.adept.net.au